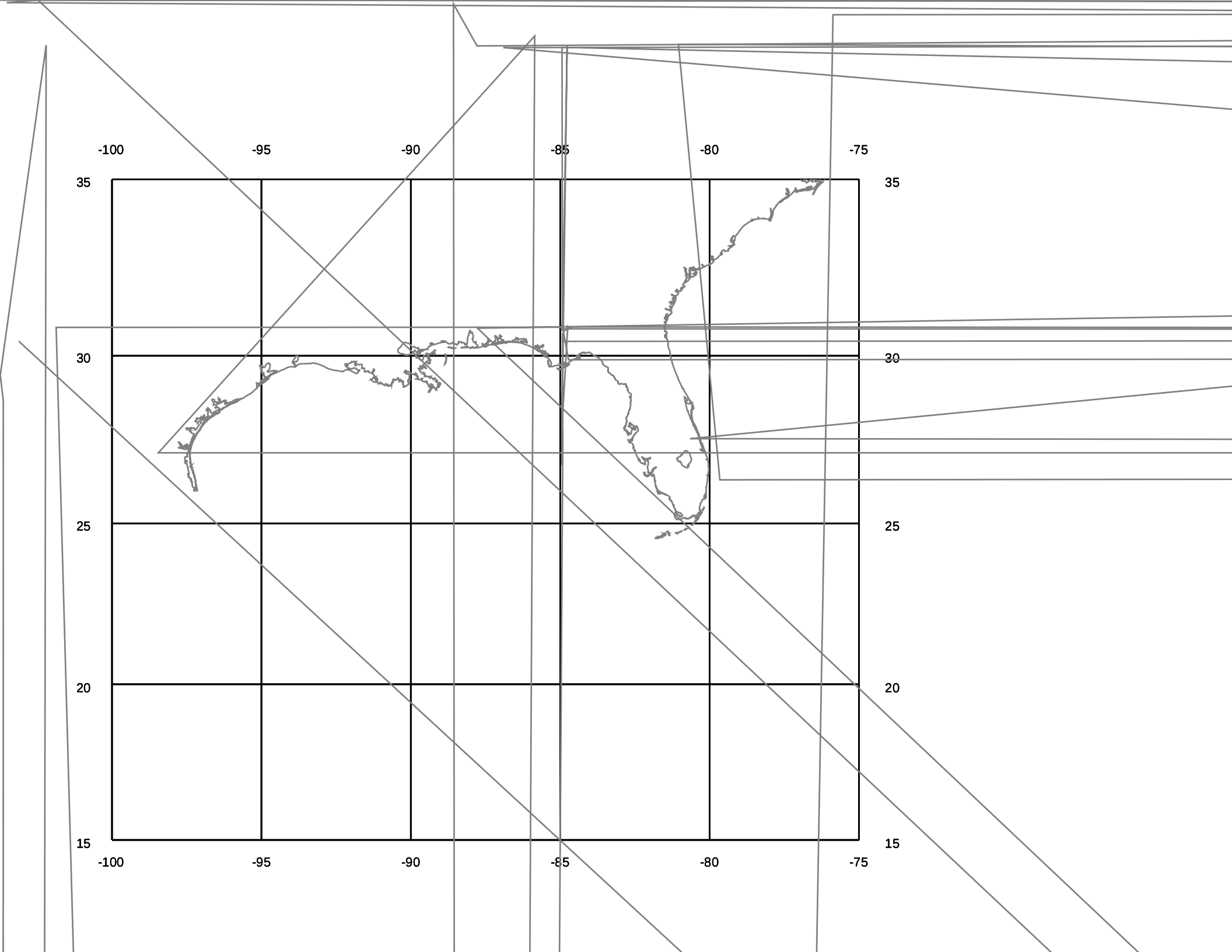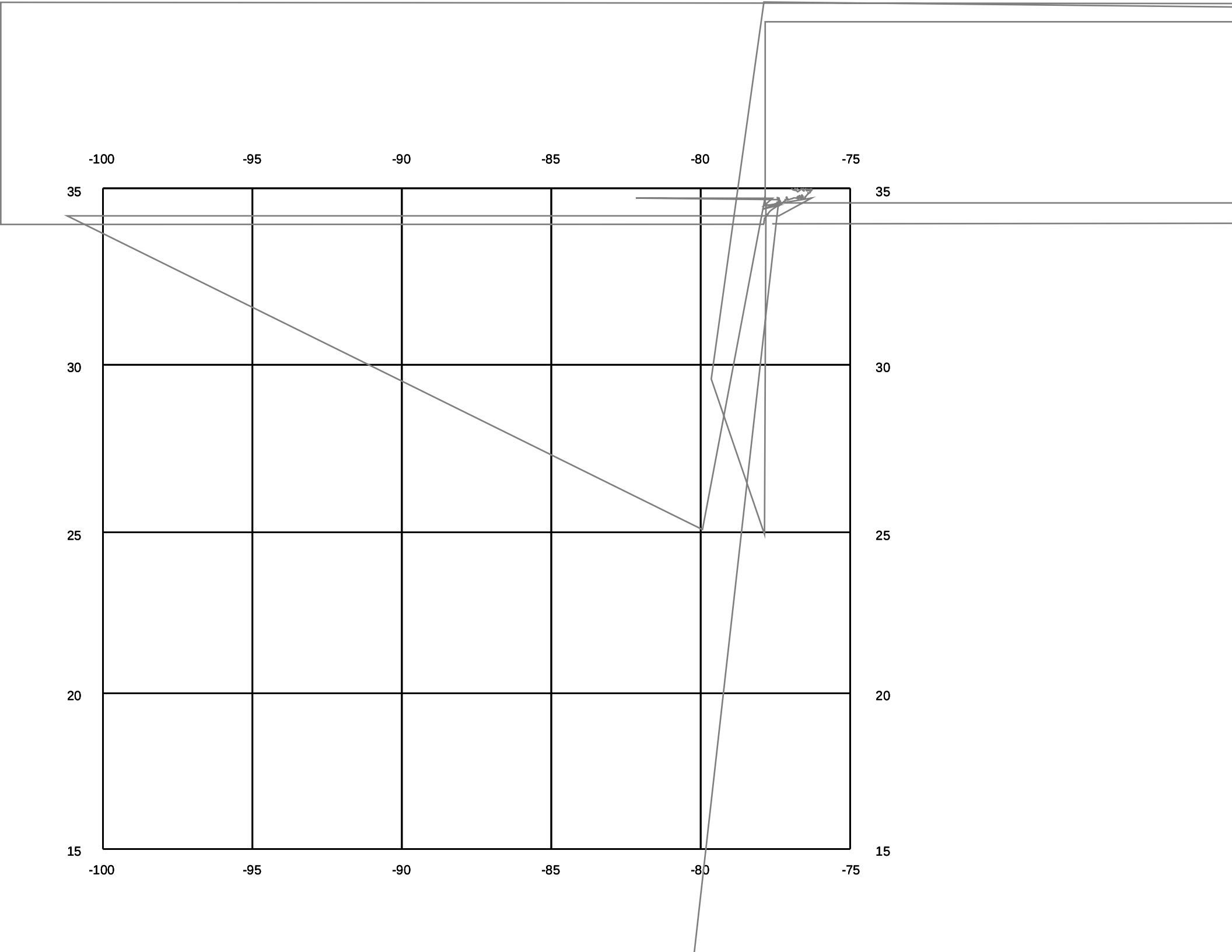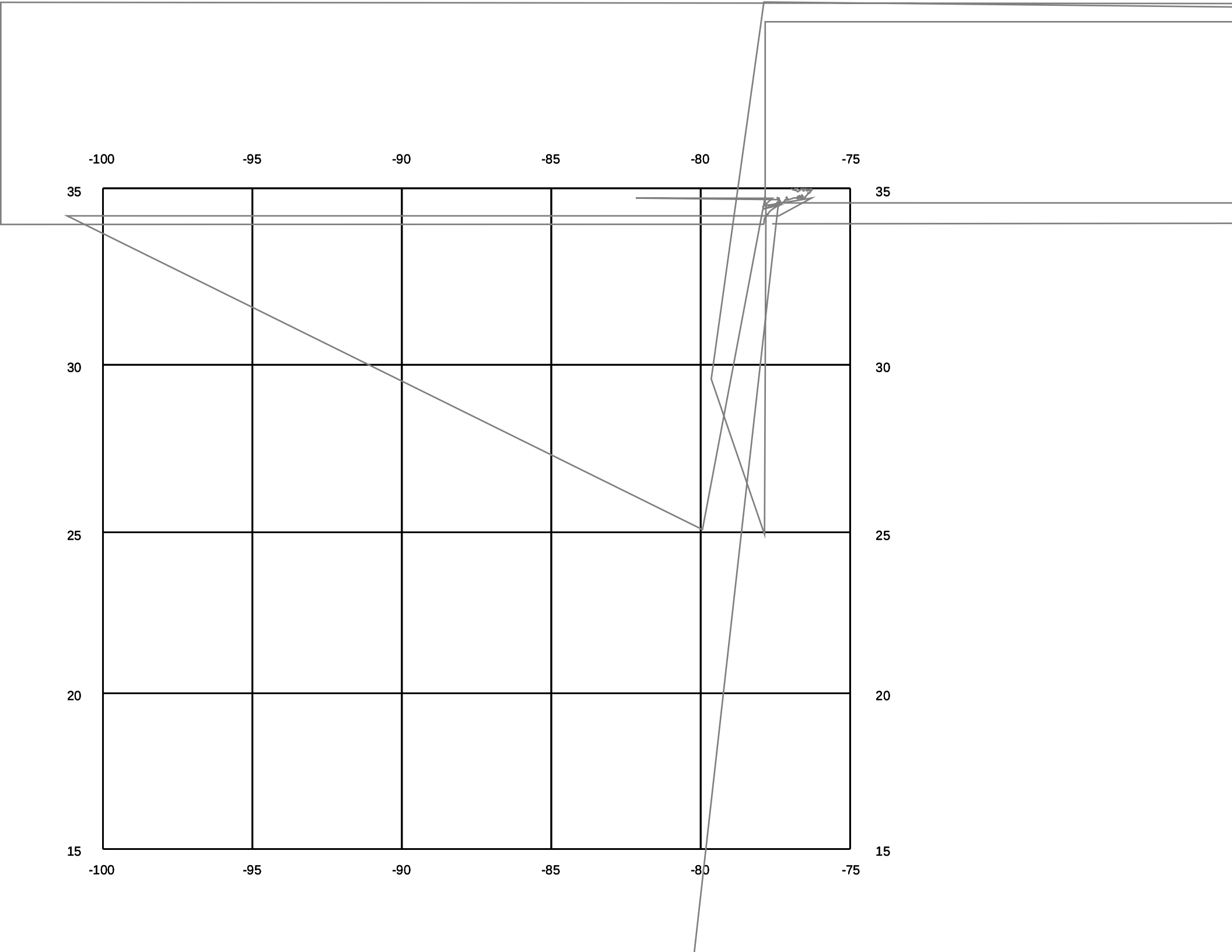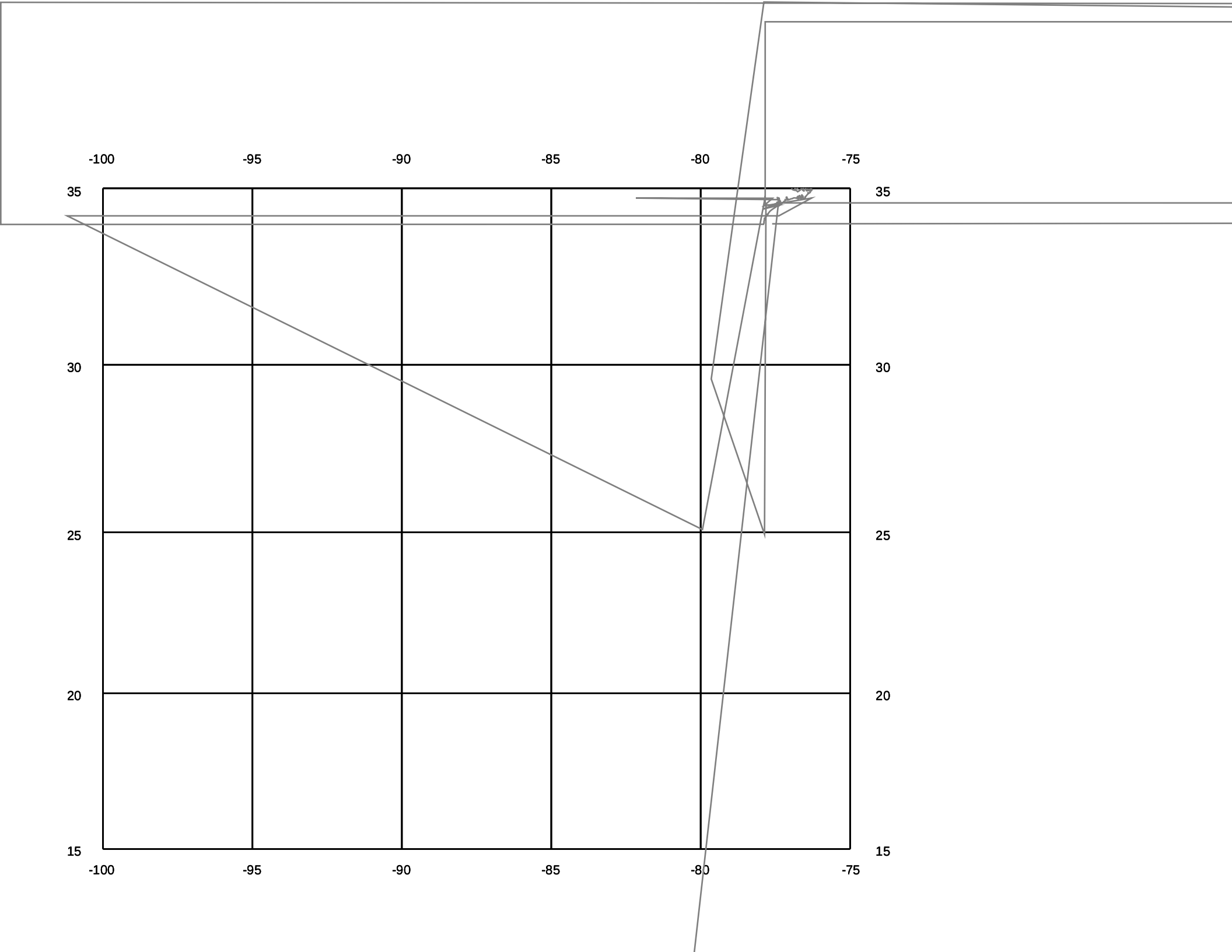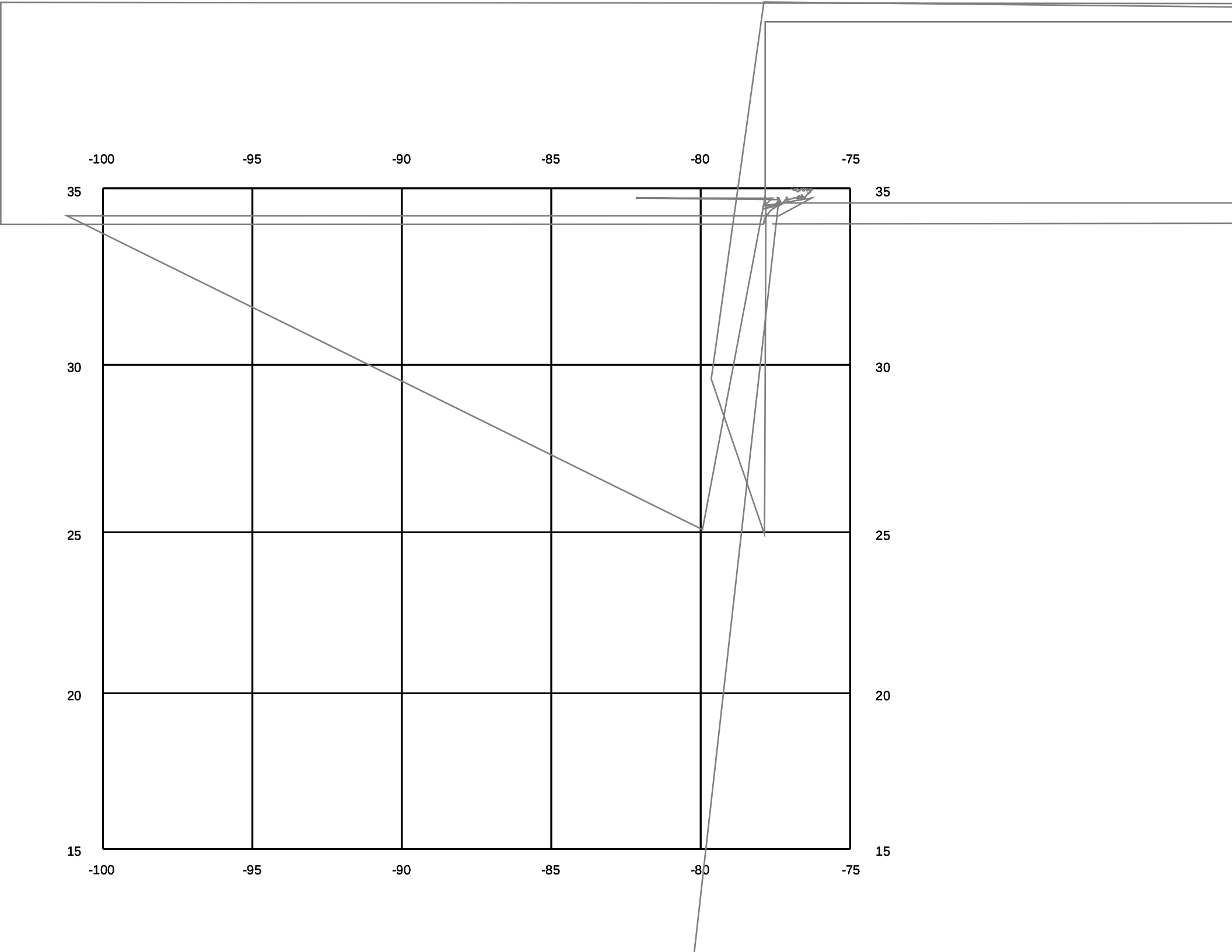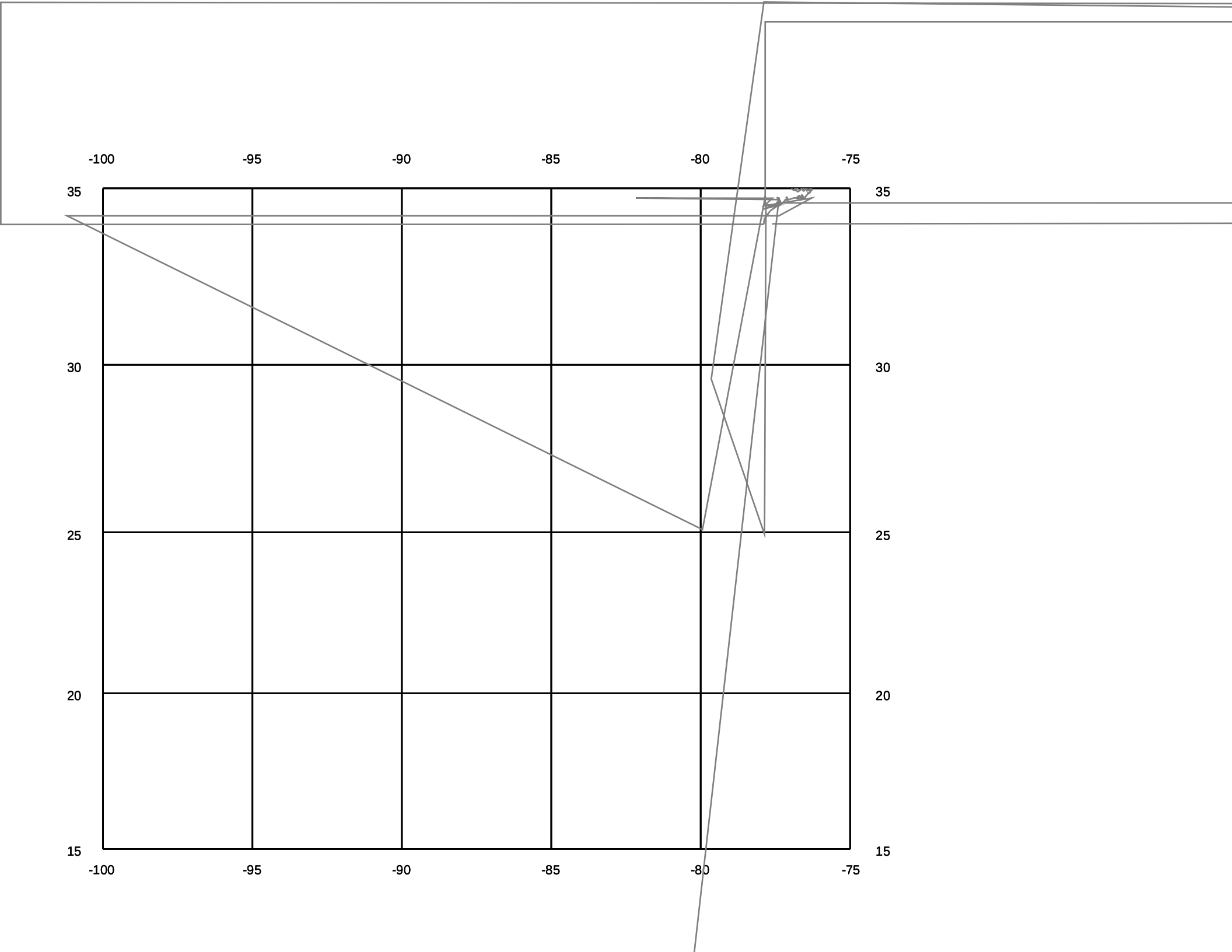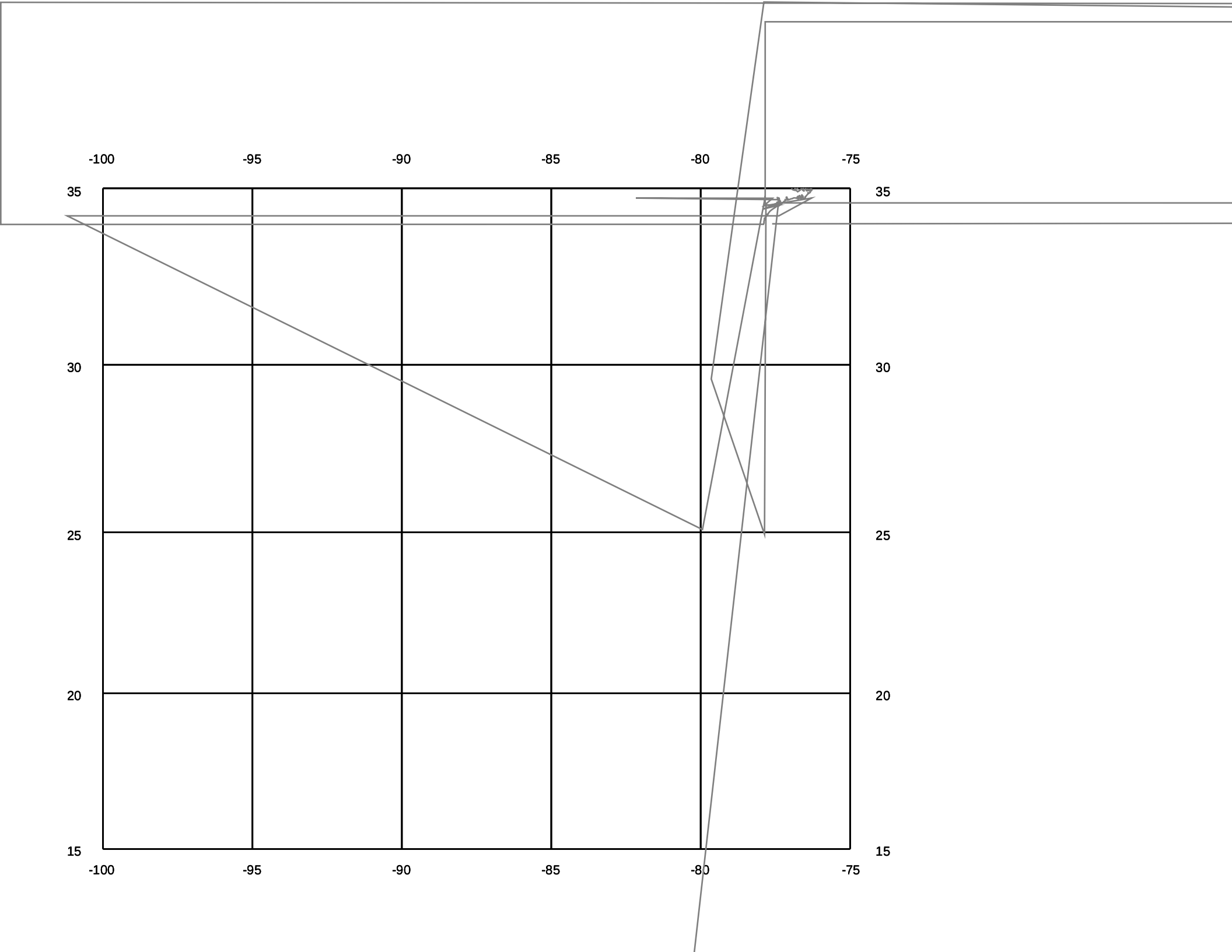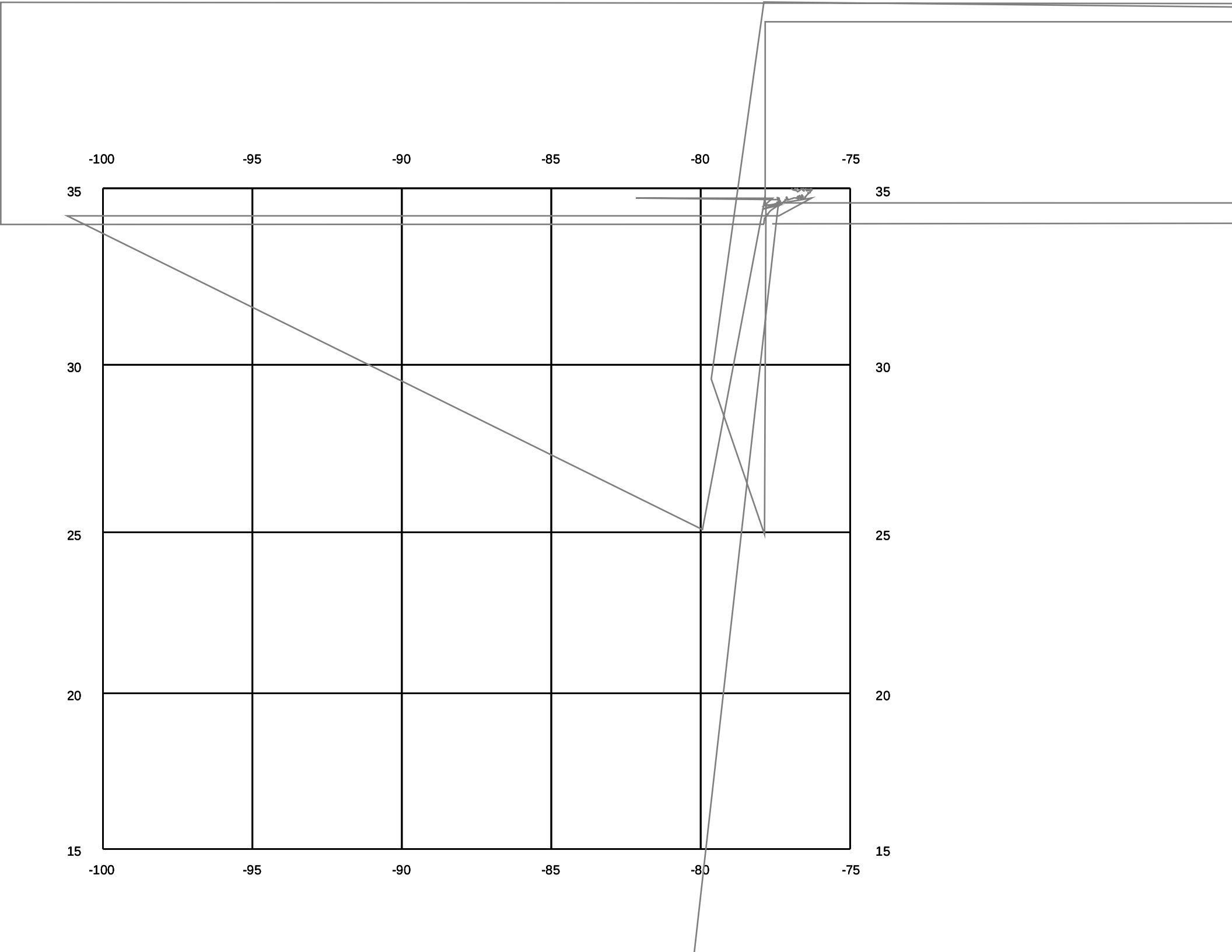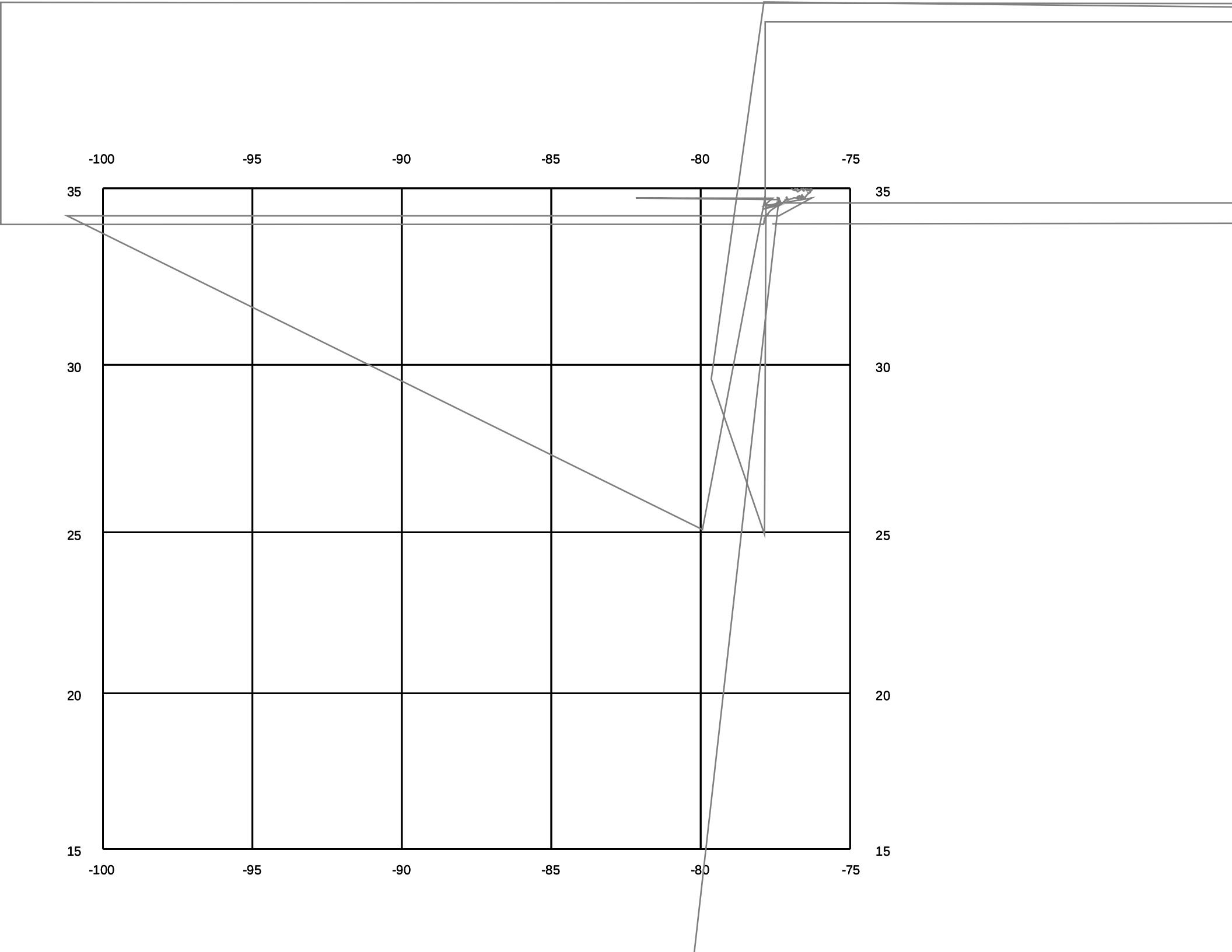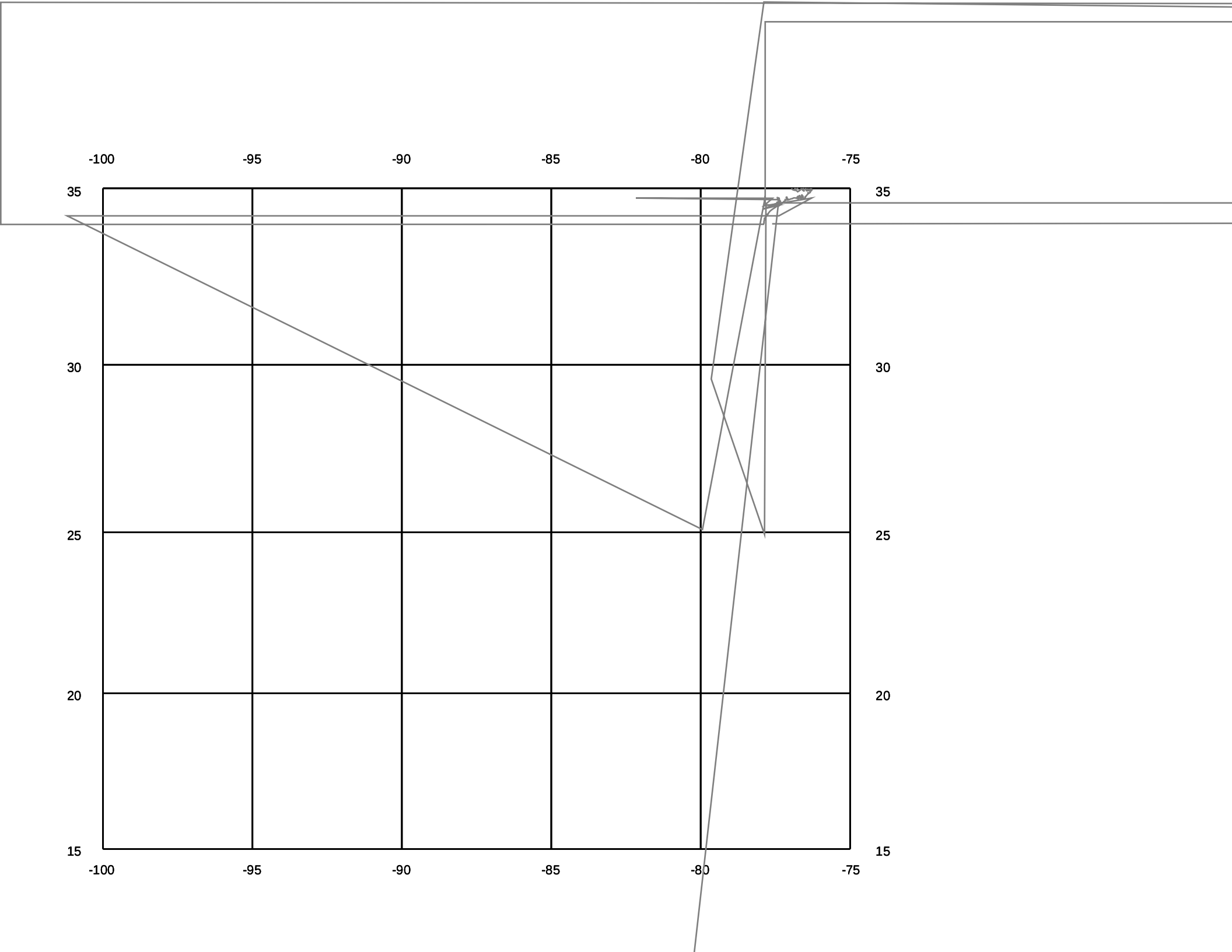
-100
-95
-90
-85
-80
-75
35
30
25
20
15