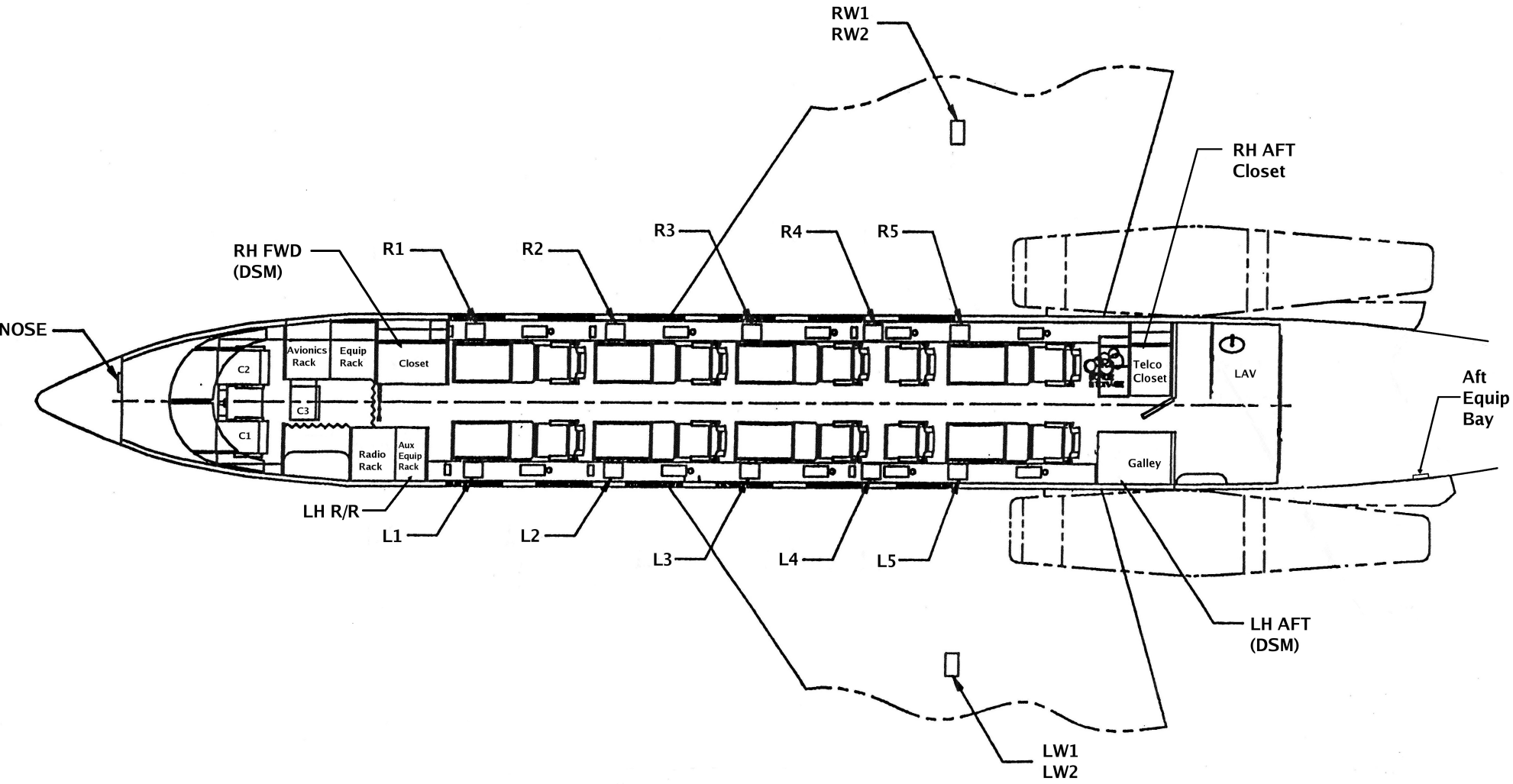Aircraft LDSN Locations